版本标识	A

记号	来历	年月日	订正	审查	记号	来历	年月日	订正	审查
①					④				
②					⑤				
③					⑥				

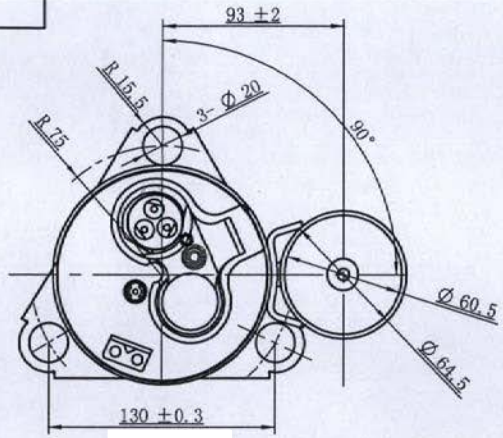

(SAME PITCHES)

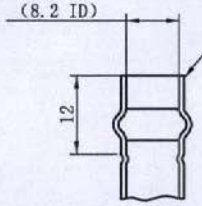

THE COLUMN WHICH LESS THAN DIAMETER 8.15mm CAN PASS THE PIPE. BUT THE COLUMN WHICH MORE THAN DIAMETER 7.8mm CAN'T PASS THE PROTRUSIVE POSITION.

DISCHARGE PIPE (NTS)

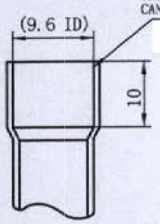

THE COLUMN WHICH LESS THAN DIAMETER 9.48mm CAN PASS THE PIPE.

SUCTION PIPE (NTS)

GASKET

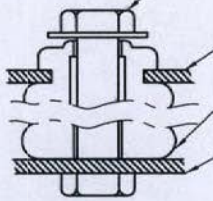

RUBBER GROMMET STRUCTURE

THE CONCRETE APPEARANCE IS SUBJECT TO MATERIAL OBJECT

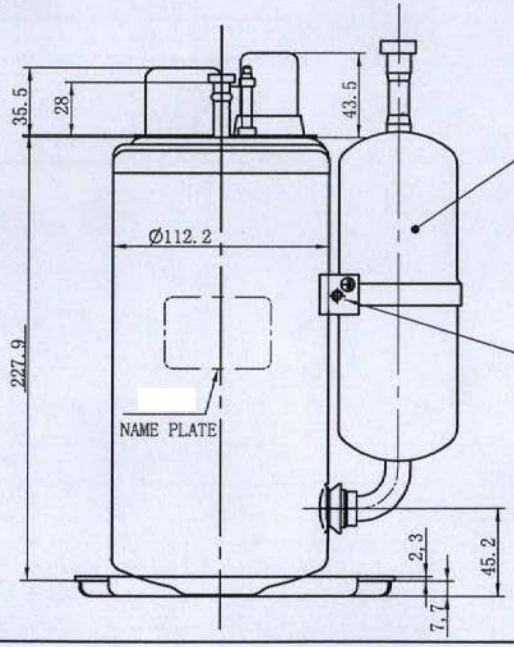

THE ACCUMULATOR APPEARANCE IS SUBJECT TO MATERIAL OBJECT

SCREW HOLE FOR EARTH (BOTH SIDES)

(TO USE M4 SCREW)

NOTE:

1. THE TORQUE ENFORCED ON THE NUT IS 0.4~0.6N.m.

DIMENSION: mm

	RE. MARKS			PROJECTION	SCALE NTS	
REGD	DWN.		TITLE	shanghai Hitachi,Ltd.		DWN NO.
	CHKD.		DIMENSIONED SKETCH			
	CHKD.					
	APPD.					