记号	来历	年月日	订正	审查	记号	来历	年月日	订正	审查
①					④				
②					⑤				
③					⑥				

A

4CYCA0016

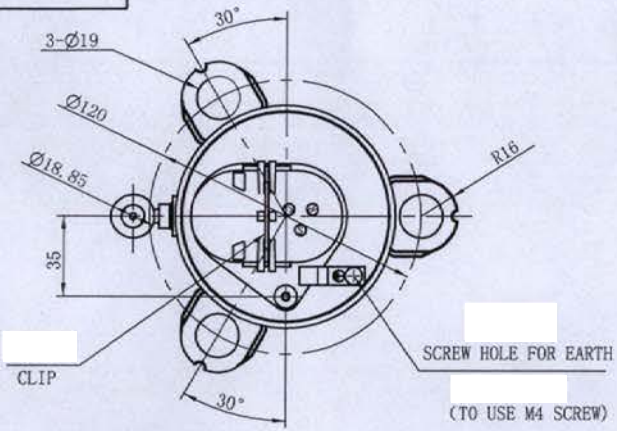

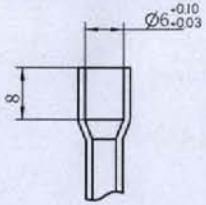

DISCHARGE PIPE (NTS)

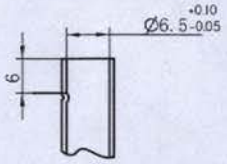

SUCTION PIPE (NTS)

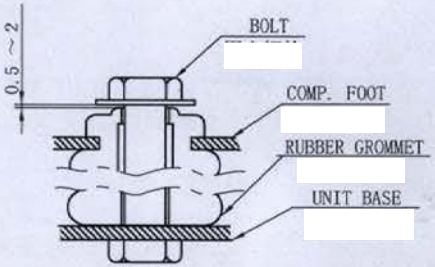

RUBBER GROMMET STRUCTURE

THE CONCRETE APPEARANCE IS SUBJECT TO MATERIAL OBJECT

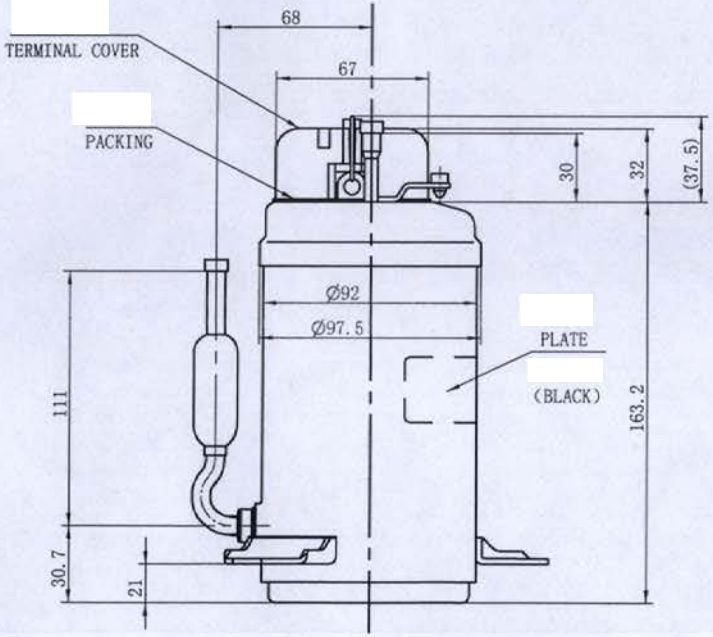

DIMENSION: mm

WHP00680BSV-Y1DN			

	RE. MARKS		PROJECTION	SCALE NTS	
REGD	DWN.	2012-2-2	TITLE	shanghai Hitachi Ltd.	DWN.NO.
	CHKD.	2012-2-2	DIMENSIONED SKETCH		4CYCA0016
	CHKD.				
	APPD.	2012-2-2			