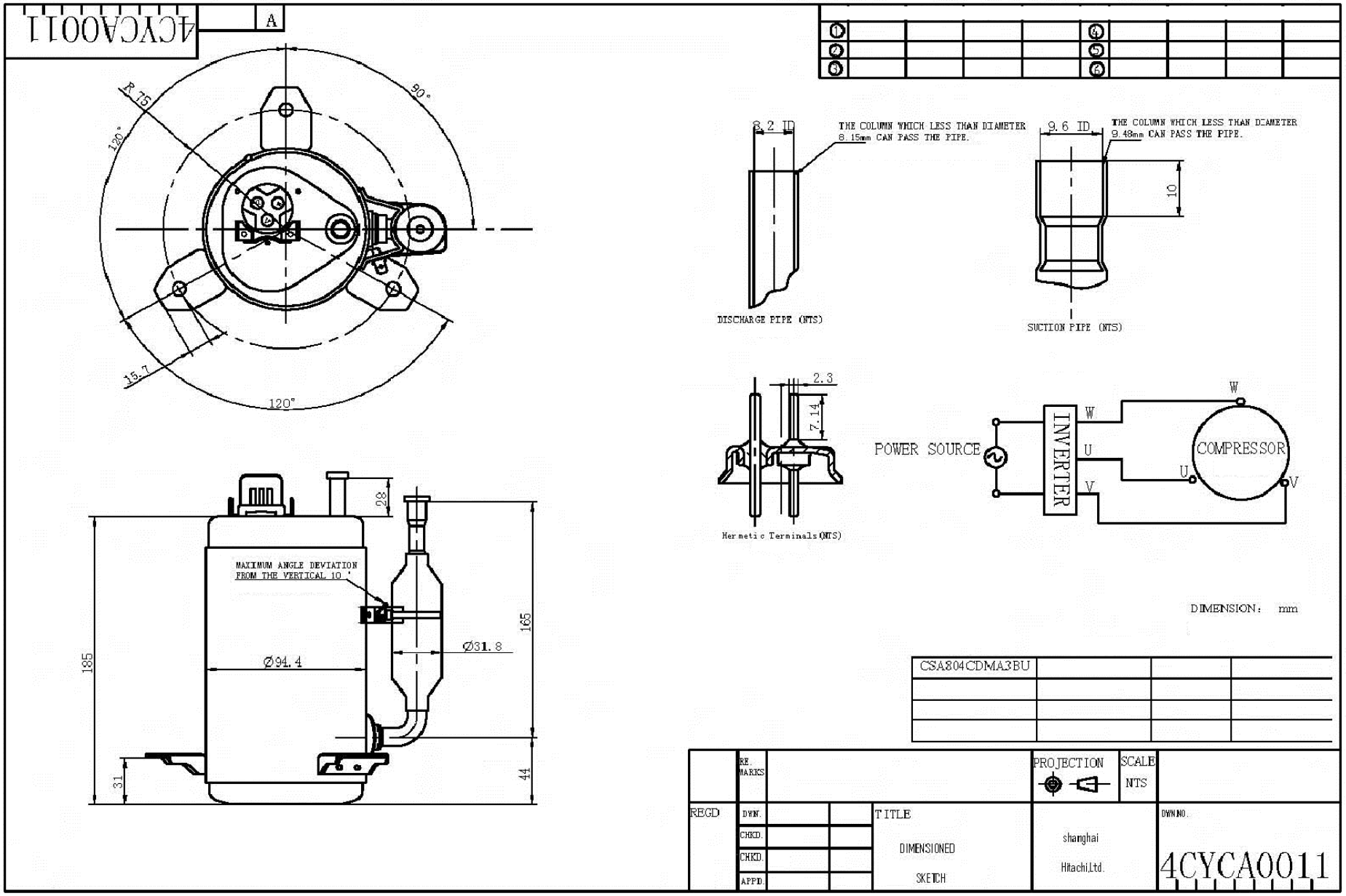
4CYCA0011
A
R 75
90°
120°
15.7
120°
8.2 ID
THE COLUMN WHICH LESS THAN DIAMETER 8.15mm CAN PASS THE PIPE.
DISCHARGE PIPE (NTS)
9.6 ID
THE COLUMN WHICH LESS THAN DIAMETER 9.48mm CAN PASS THE PIPE.
10
SUCTION PIPE (NTS)
2.3
7.14
Hermetic Terminals(NTS)
POWER SOURCE
INVERTER
W
U
V
COMPRESSOR
28
MAXIMUM ANGLE DEVIATION FROM THE VERTICAL 10 °
185
Ø94.4
Ø31.8
165
31
44
DIMENSION: mm
CSA804CDMA3BU
RE. MARKS
PROJECTION
SCALE NTS
REGD
DWN.
CHKD.
CHKD.
APPD.
TITLE
DIMENSIONED SKETCH
shanghai Hitachi,Ltd.
DWN.NO.
4CYCA0011